We reserve all rights in this document and in the information contained therein. Reproduction, use or disclosure to third parties without express authority is strictly forbidden. Copr. SEASTEMA S.p.A.

Nuovi Cantieri Apuania

Costr. 1243
Grimaldi Holding

Schema a Blocchi
Impianto Automazione

REV.	DATE	SHEETS	REVISED BY	CHECKED BY

Based on	Prepared 02-07-2009 S.B.	Schema a Blocchi Impianto Automazione	Copertina
	Approved 02-07-2009 B.C.		
	N.C.A. Hull. 1243 SEASTEMA Ref. 21210001	SEASTEMA MARINE AUTOMATION SOLUTIONS A FINCANTIERI AND ABB COMPANY	Resp.dept. / Rev.ind. – / Lang. it
Rev / Rev. Note / Date / Name			21210001G0100 / Sheet 00A / Cont. 00B

We reserve all rights in this document and in the information contained therein. Reproduction, use or disclosure to third parties without express authority is strictly forbidden. Copr. SEASTEMA S.p.A.

SHEET	DESCRIPTION	REVISION A	B	C	D	E	F	G
A	TITOLO							
B	INDICE							
01	Schema a blocchi Rete LAN							
02	Schema a blocchi Profibus e Seriali							
03	Schema a blocchi Alimentazioni							
04								
05								
06								
07								
08								
09								
10								
11								
12								
13								
14								
15								
16								
17								
18								
19								
20								
21								
22								
23								
24								
25								
26								
27								
28								
29								

SHEET	DESCRIPTION	REVISION A	B	C	D	E	F
30							
31							
32							
33							
34							
35							
36							
37							
38							
39							
40							
41							
42							
43							
44							
45							
46							
47							
48							
49							
50							
51							
52							
53							
54							
55							
56							
57							
58							
59							
60							

Based on

Rev	Rev. Note	Date	Name

Prepared 02-07-2009 S.B.
Approved 02-07-2009 B.C.

N.C.A. Hull. 1243
SEASTEMA Ref. 21210001

Schema a Blocchi
Impianto Automazione
Rete LAN

SEASTEMA MARINE AUTOMATION SOLUTIONS — A FINCANTIERI AND ABB COMPANY

Indice

Resp.dept. | Rev.ind. – | Lang. it

21210001G0100

Sheet 00B
Cont. 001

We reserve all rights in this document and in the information contained therein. Reproduction, use or disclosure to third parties without express authority is strictly forbidden. Copr. SEASTEMA S.p.A.

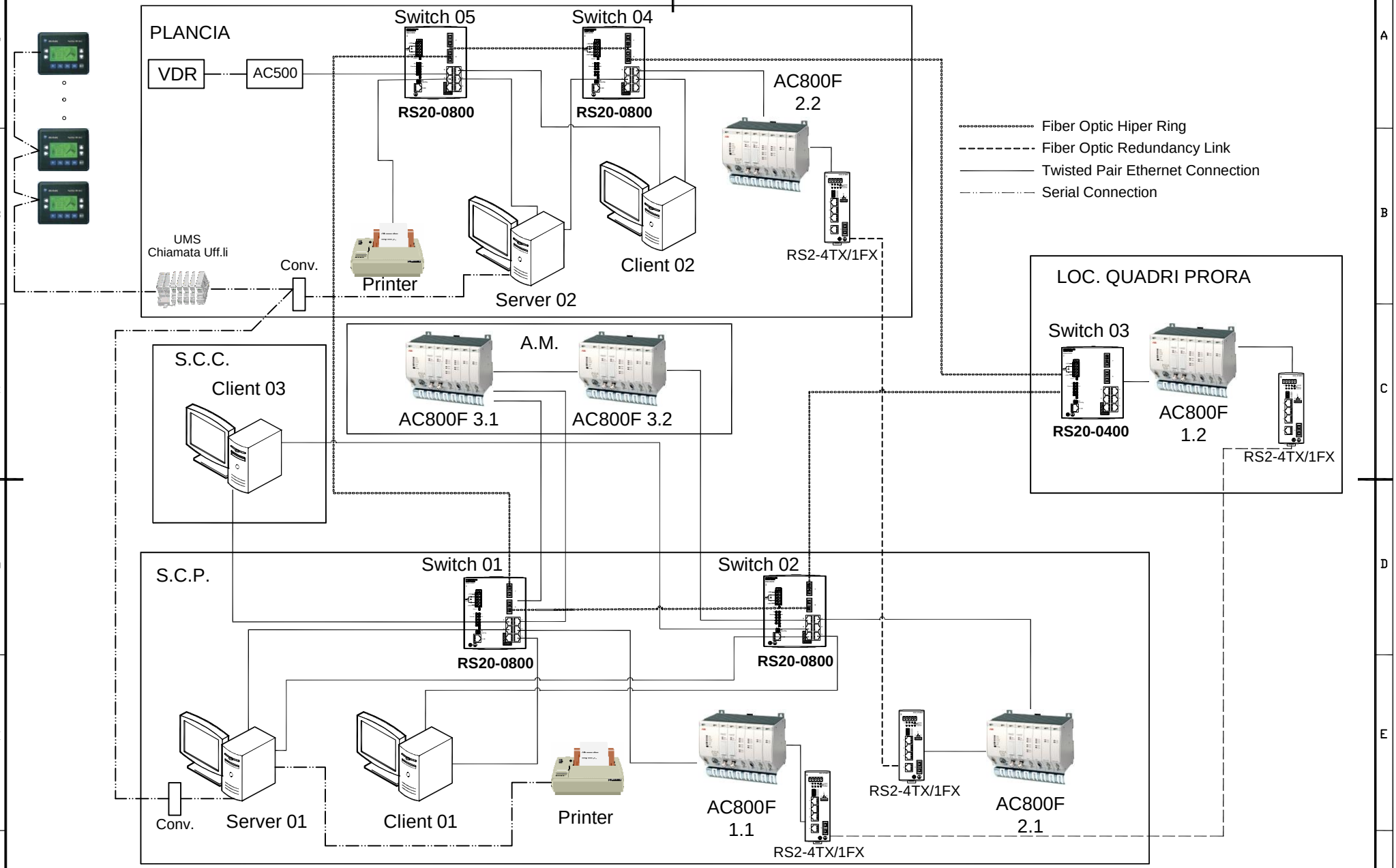

Based on	Prepared 02-07-2009 S.B.	Schema a Blocchi Impianto Automazione Rete LAN e Seriali	Schema a blocchi
	Approved 02-07-2009 B.C.		
	N.C.A. Hull. 1243 SEASTEMA Ref. 21210001	SEASTEMA MARINE AUTOMATION SOLUTIONS — A FINCANTIERI AND ABB COMPANY	Resp.dept. / Rev.ind. – / Lang. it
Rev / Rev. Note / Date / Name			21210001G0100 / Sheet 001 / Cont. 002

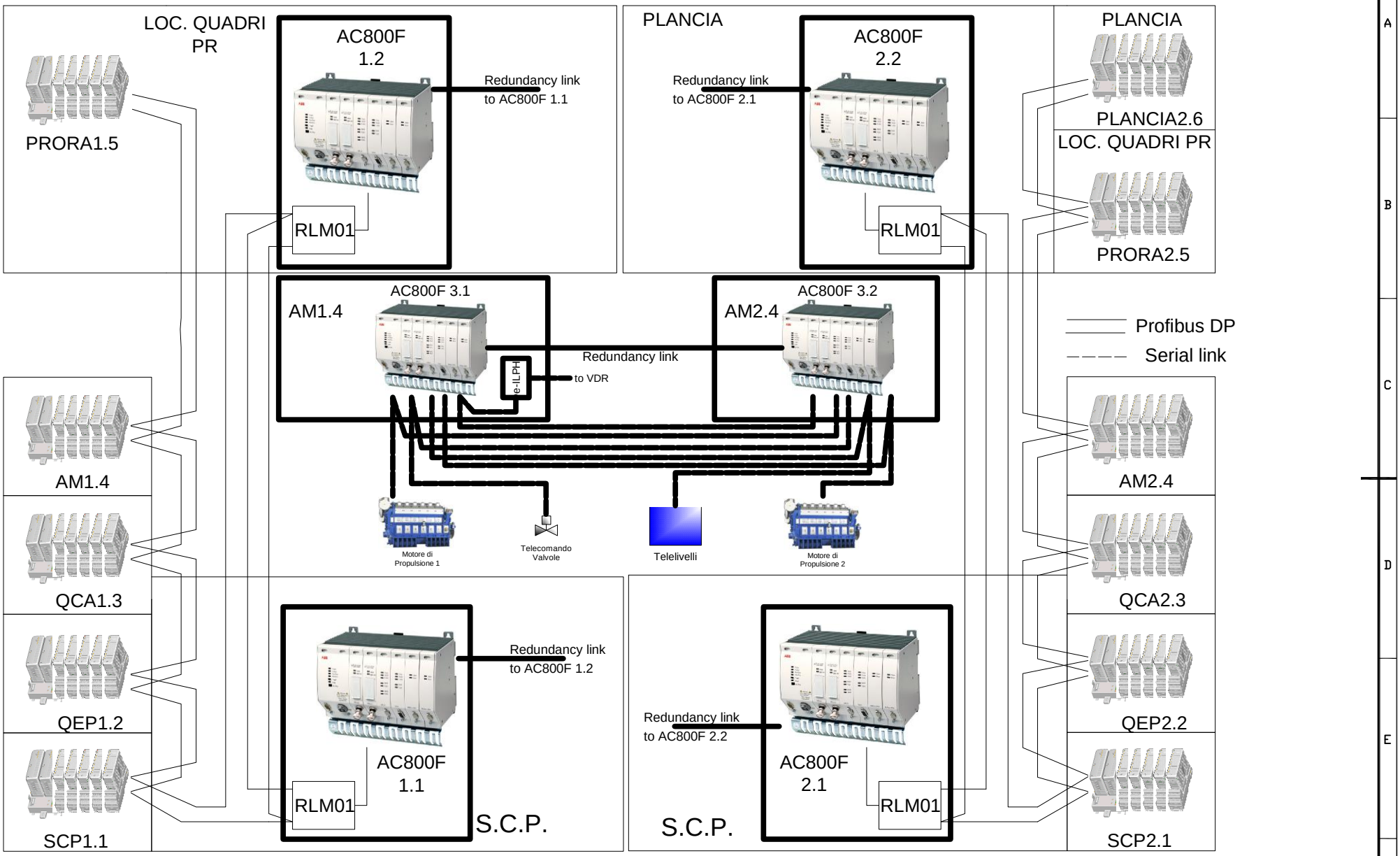

Based on	Prepared 02-07-2009 S.B.	Schema a Blocchi Impianto Automazione Profibus e Seriali	Schema a blocchi
	Approved 02-07-2009 B.C.		Resp.dept. / Rev.ind. – / Lang. it
	N.C.A. Hull. 1243 SEASTEMA Ref. 21210001	SEASTEMA MARINE AUTOMATION SOLUTIONS — A FINCANTIERI AND ABB COMPANY	21210001G0100
Rev / Rev. Note / Date / Name			Sheet 002 / Cont. 003

We reserve all rights in this document and in the information contained therein. Reproduction, use or disclosure to third parties without express authority is strictly forbidden. Copr. SEASTEMA SpA.

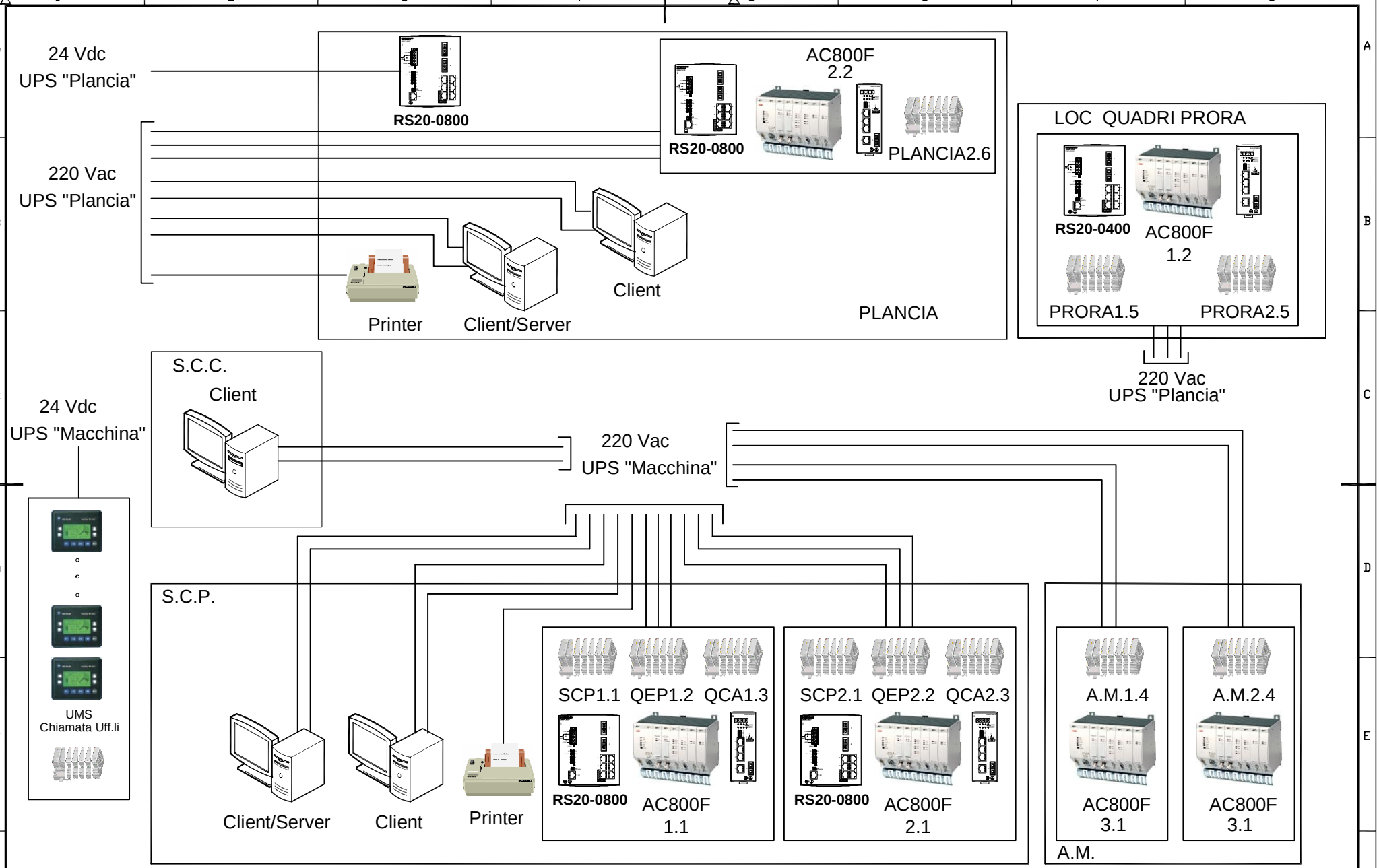

Based on				Prepared 02-07-2009 S.B.	Schema a Blocchi Impianto Automazione Alimentazioni	Schema a blocchi	
				Approved 02-07-2009 B.C.		Resp.dept.	Rev.ind. – Lang. it
				N.C.A. Hull. 1243 SEASTEMA Ref. 21210001	SEASTEMA MARINE AUTOMATION SOLUTIONS A FINCANTIERI AND ABB COMPANY	21210001G0100	Sheet 003 Cont. ---
Rev	Rev. Note	Date	Name				

We reserve all rights in this document and in the information contained therein. Reproduction, use or disclosure to third parties without express authority is strictly forbidden. Copr. SEASTEMA SpA.